ISSN 2395-1621

# Fatigue life prediction of lower suspension vehicle arm

#1C M Kamble, #2Prof. D H Burande,

1cmkamble13.scoe@gmail.com
2dhburande.scoe@sinhgad.edu

#12Mechanical Engineering Department, Sinhgad College of Engineering, Vadgaon (Bk), Pune, India

## ABSTRACT

**This paper presents the fatigue life behaviour of lower suspension arm using stress life approach. The main objective of this study is to predict the fatigue life and identify the critical location. Mild steel is been selected as a suspension arm material. The fatigue life predicted utilizing the finite element based fatigue analysis. The structural model of the suspension arm is been modelled using a CAD software. The finite element model and analysis were performed utilizing the finite element analysis. In addition, the fatigue life was predicted using the stress life approach subjected to variable amplitude loading. The validation will be carried out with available results obtained from experimental work.**

*Keywords*— **Fatigue, Finite Element Analysis, Lower Suspension Arm, Stress life.**

ARTICLE INFO

**Article History**

Received :18th November 2015

Received in revised form :

19th November 2015

Accepted : 21st November , 2015

**Published online :**

**22nd November 2015**

## I. INTRODUCTION

Suspension is the system of linkages and springs or shocks that allows the wheels to move up and down independent of the body. This is important for absorbing bumps in rough terrain, gracefully landing jumps, and getting the right amount of body lean and weight transfer in turns. Both end of this component are fixed to the wheel and the chassis. Suspension components, along with wheel rims and brake components are unsprung masses, which make weight reduction important for ride quality and response as well as for reducing the total vehicle weight. Every automotive suspension has two goals, passenger comfort and vehicle control. Comfort is provided by isolating the vehicle's passengers from road disturbances like bumps or potholes. The Macpherson lower arm is a type of independent suspension used in motor vehicles. The general function of control arms is to keep the wheels of a motor vehicle from uncontrollably swerving when the road conditions are not smooth [1]. The control arm suspension normally consists of upper and lower arms. The upper and lower control arms have different structures based on the model and purpose of the vehicle. By many accounts, the lower control arm is the better shock absorber than the upper arm because of its position and load bearing capacities In the automotive industry, the riding comfort and handling qualities of an automobile are greatly affected by the suspension system, in which the suspended portion of the vehicle is attached to the wheels by elastic members in order to cushion the impact of road irregularities. The specific nature of attaching linkages and spring elements varies widely among automobile models[3]. The best rides are made possibly by independent suspension systems, which permit the wheels to move independently of each other. Suspension arm is one of the main components in the suspension systems. It can be seen in various types of the suspensions like Macpherson, wishbone or double wishbone suspensions. Most of the times it is called as A-type control arm. Control is achieved by keeping the car body from rolling and pitching excessively, and maintaining good contact between the tire and the road [4].

Most of the cases the failures are catastrophic in nature. So the structural integrity of the suspension arm is crucial from design point of view both in static and dynamic

© 2015, IERJ All Rights Reserved 

conditions. Therefore it is subjected to cyclic loading and it is consequently prone to fatigue damage. The stress from the wheel unit and the shock absorber that are acting on the lower suspension arm can be analyzed from this finite element analysis [7].

As the Finite Element Method (FEM) gives better visualization of this kind of the failures so FEM analysis of the stress distributions around typical failure initiations sites is essential. Therefore in this dissertation work it is proposed to carry out the structural analysis as well as fatigue analysis of lower suspension arm of light commercial vehicle using FEM.

### A. Objective

The key objective of this effort is to carry out static and fatigue analysis of lower control arm.

1. Determinations of the forces acting on the lower control arm during various running conditions.
2. Solid modeling of the lower control arm of suspension system.
3. Upon finding results for structural analysis, use the inputs for pursuing fatigue analysis.
4. Validating the FEA results with Experimental results

## II.METHODOLOGY

To determine stresses and to study various forces acting on lower suspension arm CAD model of lower control arm designed in ProEngineer software as shown in figure 1, was imported in ANSYS Workbench for geometric cleanup and meshing. Meshed model of the lower arm essentially consist of 20327 nodes and 58221 elements. Tetra elements give enhanced result as compared to other types of elements, therefore the elements used in this analysis is tetra elements.

The material Mild Steel was used for lower control arm. Calculated forces and boundary conditions were applied on meshed model in ANSYS Workbench as shown in figure 2. Static and Fatigue analysis was performed by using ANSYS Workbench.

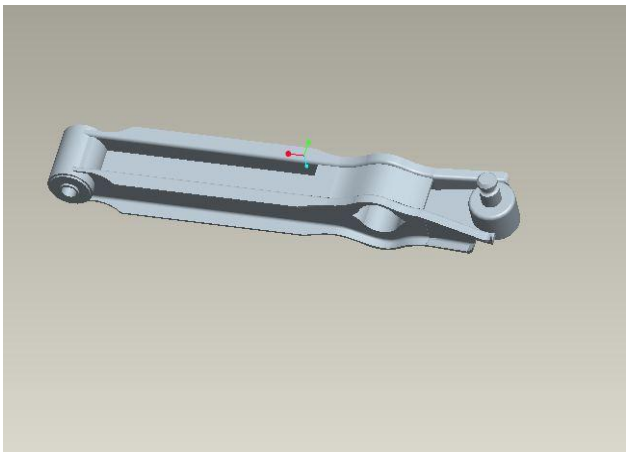

Fig.1 CAD Model of Lower Suspension Arm

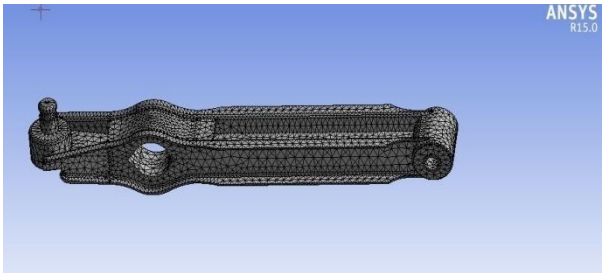


Fig.2 Meshed Model of lower Suspension Arm.

### A. *Vehicle Specifications*

Table 1: Vehicle Parameters

| *Parameters* | *Description* | *Values* |
|---|---|---|
| **M** | **Mass of vehicle (kg)** | **1350** |
| **B** | **Front axle track width (m)** | **1.495** |
| **H** | **Height of centre of gravity (m)** | **1.16** |
| **L** | **Wheelbase (m)** | **2.4** |
| **$L_f$** | **Distance from front axle to CG (m)** | **1.295** |
| **$L_R$** | **Distance from rear axle to CG (m)** | **1.290** |

Table 2: Assumption made for calculations [2]

| *Parameters* | *Description* | *Values* |
|---|---|---|
| **R** | **Radius of curvature (m)** | **100** |
| **β** | **Angle of banking (Degree)** | **12** |
| **θ** | **Slope (Degree)** | **11** |
| **$f_s$** | **Coefficient of friction between Tires and road** | **0.6** |
| **a** | **Retardation By braking ($m/s^2$)** | **6** |
| **V** | **Velocity of vehicle(kmph)** | **60** |

1)

### *B. Design parameters*

In case of vehicle in actual running conditions forces acting on it are of dynamic in nature and changes as per driving conditions. Various longitudinal forces are acting due to braking and acceleration while lateral forces acting due to cornering of vehicle. In order to make preliminary analysis steady state operating conditions are assumed. The assumptions made are smooth road conditions, steady state cornering and constant grade.

*1. Vertical loads acting on wheel*

In order to determine forces acting on lower control arm, following critical situations are considered. For above condition, load acting on front outer wheel is given by

*a) Vehicle at the instant of braking on downhill grade:*

$$(W_{fo})_{brak} = (1/2L)\,[W\,(H \sin\theta + C \cos\theta) + m.a.H]$$

Where, $(W_{fo})_{brak}$ breaking force on outside wheel.

*b) Vehicle at the instant of cornering:*

© 2015, IERJ All Rights Reserved 

For above condition, load acting on front outer wheel is given by following formula,

$(W_{fo})_{corn} = (W/2a) [ (V^2/2*g)(a* Sin\beta + 2H* Cos\beta) + (a.Cos\beta – 2H* Sin \beta )]$

Where, $(W_{fo})_{corn}$ is cornering force on outside wheel.

*2. Lateral Loads acting on Wheel*

While vehicle taking turn, lateral forces acts on it which is given by

$(L)_{fo}= \mu*(W)_{total}$

Where, $(W)_{total} = (W_{fo})_{brak} + (W_{fo})_{corn}$

Numerical values of forces acting on wheel are given by table

| Sr. No. | Velocity(kmph) | $(W)_{total}$(N) | $(L)_{fo}$(N) |
|---|---|---|---|
| 1 | 120 | 16424.69 | 14012.43 |

Now, front outer wheel will subjected to maximum load if vehicle is subjected to above two conditions simultaneously i.e. vehicle is subjected to cornering and braking on downhill grade. Therefore, total load acting on front outer wheel can be determined by summing up the loads due to above conditions

*3. Forces acting on lower control arm*

Let $R_x$ and $R_y$ be the maximum forces at the center of contact patch of front tire as shown in figure 1 and 2.

Let $P_x$, $P_y$ and $Q_x$, $Q_y$ be the reaction forces acting on lower control arm as shown in figure 2.

The reaction forces ($P_x$, $P_y$ and $Q_x$, $Q_y$.) acting on lower control arm was found out by using equilibrium equation of mechanics.

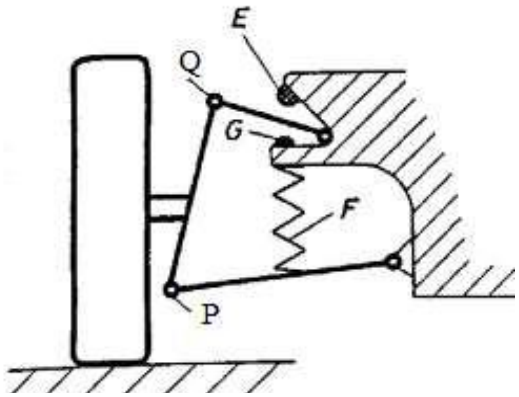


Fig.3 Suspension diagram

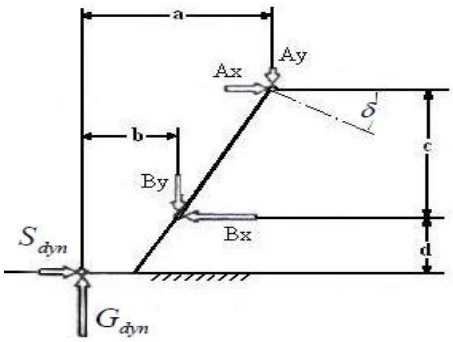


Fig. 4 Forces on suspension

**Table 4:** Reaction Forces acting on the suspension arms

| Sr. No. | Velocity(kmph) | $Q_x$ (N) | $Q_y$ (N) | $P_x$ (N) | $P_y$ (N) |
|---|---|---|---|---|---|
| 1 | 120 | 4434 | 702 | 18187 | 25290 |

Mechanical Properties of Mild Steel

| Mechanical Properties | Mild Steel |
|---|---|
| Young's Modulus ( Mpa) | 210000 |
| Poisson's Ratio | 0.3 |
| Density (kg/m$^3$) | 7850 |
| Yield Stress (Mpa) | 350 |
| Ultimate tensile strength(Mpa) | 341 |
| Yield Strength(Mpa) | 220 |

*A) Static analysis*

From figure 6, it is observed that the maximum stress developed in the component is 694.45 Mpa for Mild Steel which is higher than the maximum allowable stresses that is 350 Mpa and the blue portion shows that the maximum stress in that portion is below 350 Mpa, so the blue portion shows the part is safe 503. Hence, design is safe that is the values of maximum stresses are acceptable as compared to yield strength of respective material. From figure 6, it is observed that the total deformation in the component is 0.74975 mm which is less than the thickness of the component and also deformation limit of the material.

In order maintain constant attitude of vehicle and also to maintain road holding, component should not get deformed beyond safe limit.

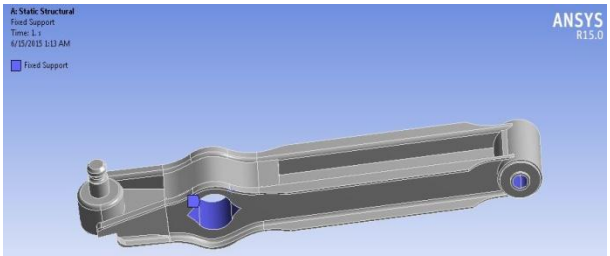


Fig.5 Fixed support of lower arm

© 2015, IERJ All Rights Reserved 

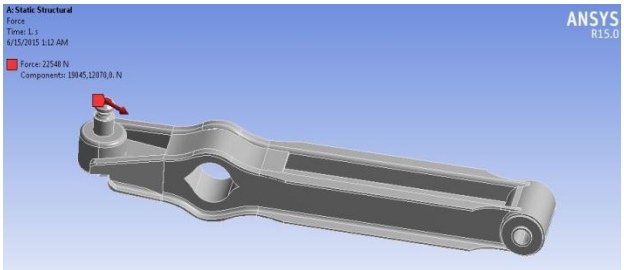


Fig.6 Loads applied on lower arm

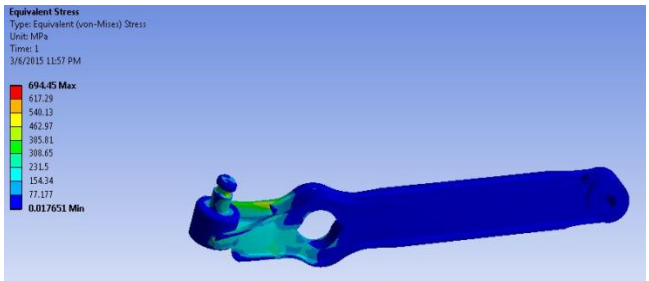


Fig.7 Stress developed in lower arm

### *B) Finite Element Based Fatigue Life Analysis*

Fatigue analysis has traditionally been performed at a later stage of the design cycle. This is due to the fact that the loading information could only be derived from the direct measurement, which requires a prototype (Bannantine et al., 1990; Stephens et al, 2001). Multibody dynamics (MBD) (Kim et al., 2002) is capable of predicting the component loads which enable designer to undertake a fatigue assessment even before the prototype is fabricated. The purpose of analyzing a structure early in the design cycle is to reduce the development time and cost. This is achieved by determining the critical region of the structure and improving the design before prototype are built and tested. The finite element (FE) based on fatigue analysis can be considered as a complete engineering analysis for the component. The fatigue life can be estimated for every element in the finite element model, and the contour plots of life damage can be obtained.

Stress Life Method

The stress life *(S-N)* method was first applied over hundred years ago (Wöhler, 1867) and consider nominal elastic stresses and how they related to life. This approach to the fatigue analysis of components works well for situations in which only elastic stresses and strains are present. However, most components may appear to have nominally cyclic elastic stresses but stress concentration are present in the component may result in load cyclic plastic deformation (Rahman et al., 2007b). The *S-N* approach is still widely used in design applications where the applied stress is primary within the elastic range of the material and the resultant lives (cycles to failure) are long, such as power transmission shaft. The stress-life method does not work well in low-cycle applications, where the applied strain have significant plastic component. The dividing line between low and high cycle fatigue depends on the material being considered, but usually falls between 10 and $10^5$ cycles [Banantine et al., 1990]. The stress-life approach was the first well-developed approach to the fatigue analysis. It is suitable to predict high cycle fatigue and has been extensively used in automotive industry. Fatigue life depends primarily on loads, materials, geometry and environmental effects and it's usually described by *S-N* curve. The stress-based approach considers the controlling parameters for fatigue life to nominal stress. The relationship between the nominal stress amplitude and fatigue life is often represented as *S-N* curve, which can expressed in Eq. (1)

$$= \sigma_f' \ (2\ )^b \qquad (1)$$

Where $\sigma_a$ is stress amplitude, $\sigma' f$ is a fatigue coefficient, $2N_f$ is the reveals to failure and $b$ is the fatigue strength exponent (Rahman et al., 2007b). The modified Goodman and Gerber equations are given by Equations (2).

$$\frac{\sigma_a}{S_e} + \frac{\sigma_m}{S_u} = 1 \qquad (2)$$

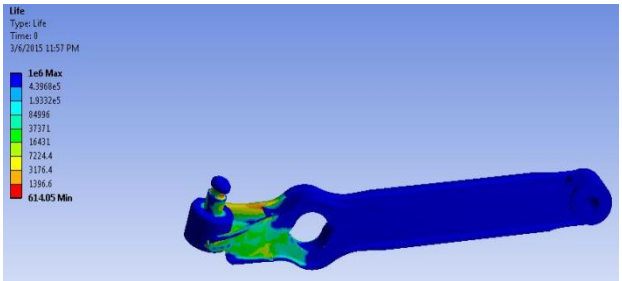


Fig.8 Life of lower arm

### *B. Experimental Analysis*

The experimental work will be carried out in the testing lab, fig below shows the CAD model of fixture along with lower arm. The cyclic load will be applied as shown in above fig, for the testing will be stopped as soon as the crack initiated. And lastly comparisons of results of crack initiation of lower arm both FEA and experimentally will be done.

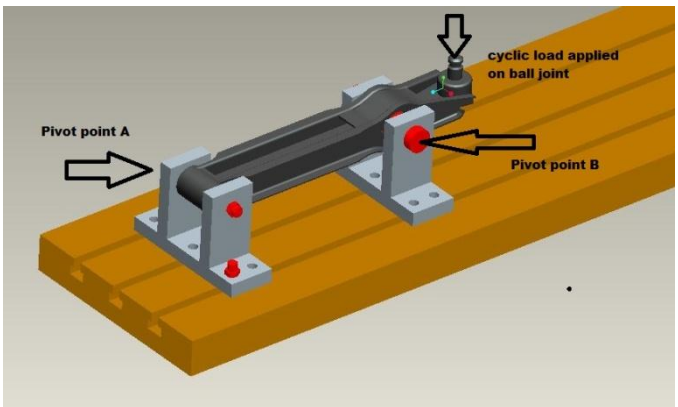


Fig.10 CAD model test set up for carrying experimental work

## III. CONCLUSION

In this project, the forces acting on lower control arm has been calculated while vehicle subjected to critical loading. The CAD model of lower control arm has been carried out using Pro-E software packages. The static and fatigue analysis has been carried out in ANSYS Workbench.

© 2015, IERJ All Rights Reserved 

Comparison of the results will be done both by FEA approach and experimental approach.

**ACKNOWLEDGMENT**

I would like to thank you my respected Guide Prof. D.H. Burande Sir & HOD (Head of Mechanical Engineering) Dr. V. H. Vankundre Sir, for providing guidance, support & valuable time to me for preparation of this paper work. I gratefully acknowledge our Principal Dr. S.D. Lokhande and P.G. Head Dr. Y.P. Reddy for making available the necessary facilities required for my project. At last i thank all those who directly or indirectly helped me in completing this project successfully.

**REFRENCES**

[1] Chandrakant M. Chaudhari, Dr. M V. Sulakhe, "Finite element analysis and testing of suspension arm," National Conference on Advances in Mechanical Engineering, 03 - 05January, 2011

[2] Duygu Guler, "Dynamic analysis of double wishbone suspension system" İzmir Institute of Technology,July2006.

[3] Jing Heng Wen (E-Z-GO, A Textron Company), "FEA Modeling Verification and Validation: Correlating Model with Test Data by Optimization Analysis", SAE TECHNICAL PAPER SERIES, 2007-01-1745, Page Nos. 2 - 7.

[4] Conle, A. & Chu, C.C. (1997). "Fatigue analysis and the local stress-strain approach in complex vehicular structures". *International Journal of Fatigue* 19(1): S317-S323

[5] Miguel A.Eguia ,Minishiou Huang, and Tay Tyan, (NAT impact safety, Ford motor company), "Crashworthiness Simulation of Lower Control Arm Impact Tests", SAE TECHNICAL PAPER SERIES, 2005-01-0361, Page Nos. 2 -10.

[6] Dr. J.M. Mahishi, Director Engineering, "STATIC AND MULTI-AXIAL FATIGUE ANALYSIS OF AUTOMOTIVE LOWER CONTROL ARM USING NEiNASTRAN", MS&M Engineering Inc, Farmington Hills, MI, USA, Page Nos. 3-5.

[7] Jing Heng Wen (E-Z-GO, A Textron Company), "FEA Modeling Verification and Validation: Correlating Model with Test Data by Optimization Analysis", SAE TECHNICAL PAPER SERIES, 2007-01-1745, Page Nos. 2 - 7.

[8] Darrell, S., Harold, R., Stephen, D., Steve, T., Brian, L. & Drew, N. (1968). "Fatigue Design Handbook, *Advances in Engineering*". Warrendale: Society of Automotive Engineers.

[9] Devlukia, J. and Bargmann, H. (1997). "Fatigue assessment of an automotive suspension component using deterministic and probabilistic approaches". *2nd International Symposium of Fatigue Design*, pp. 436-445.

[10] Haiba, M., Barton, D., Brooks, P. and Levesley, M. (2002). "Review of life assessment techniques applied to dynamically loaded automotive components". *Computer Structure* 80: 481-494.

[11] Keiichi, M., Takashi, Y., Hiroaki, H., 2000, "A Study of Automobile Suspension Design Using Optimization Technique", AIAA Paper No. AIAA-2000-4748.

[12] Edmund, F. G., Salinas, A. R., 2003, "Introduction to Formula SAE Suspension and Frame Design", SAE, Paper No.971584.

© 2015, IERJ All Rights Reserved 